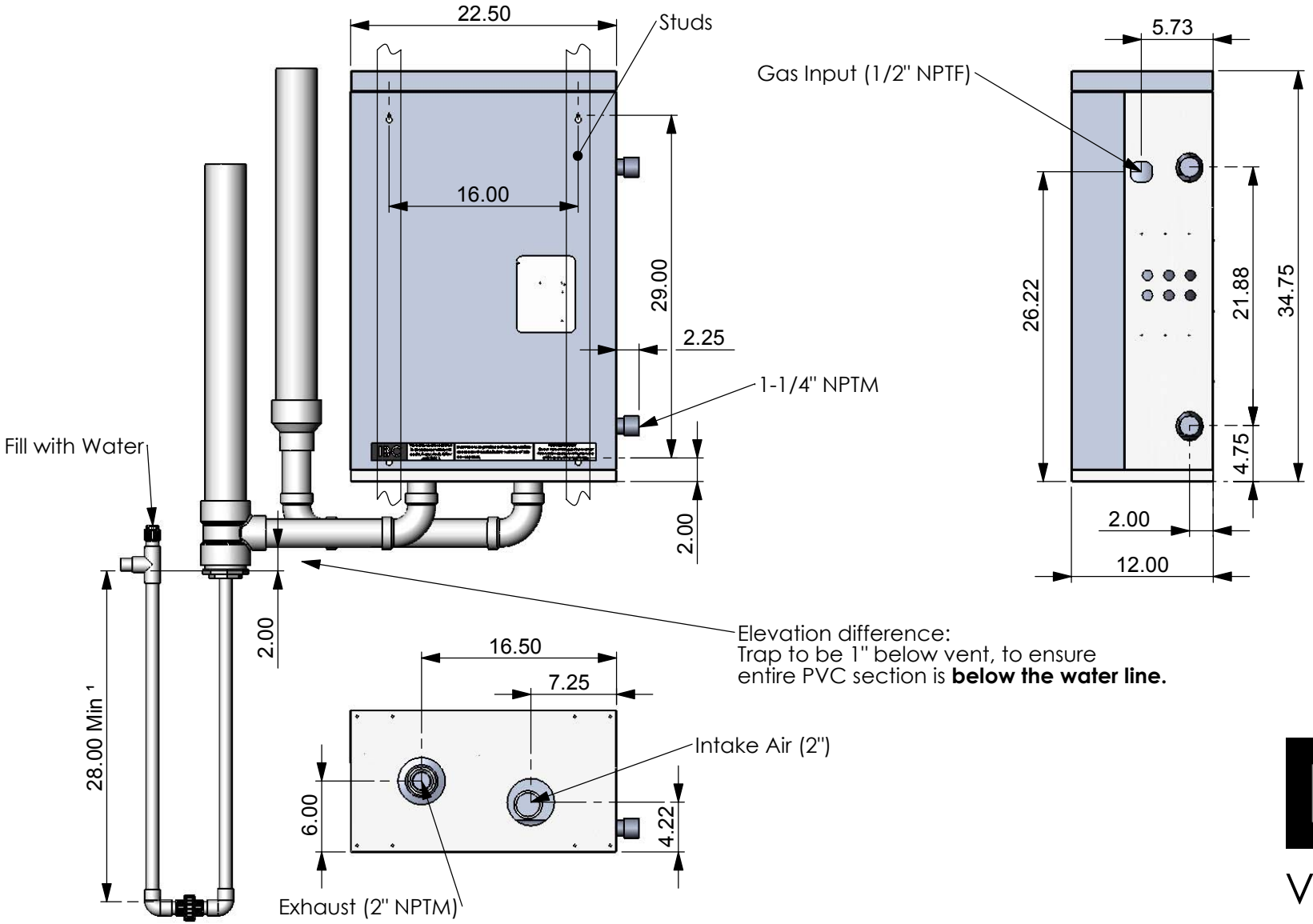

IBC

VFC 45-225

[1] Using conventional drop (as shown) or via a ball trap having similar properties.

If draining into ferrous or copper piping, neutralization is required. Use IBC part # 67-Neutr'n.

All Dimentions in Inches

Max. Venting Length (Each Side)	
Pipe Size	**Max. Equiv.Length**
3"	120'
90° long elbow(ABS)	allow 5' equiv.
45° elbow(ABS)	allow 3' equiv.
90° elbow(PVC)	allow 8' equiv.
45° elbow(PVC)	allow 4' equiv.

General Specifications	
Max. Gas Supply Pressure	Nat. Gas 14" w.c.
Min. Gas Supply Pressure	Nat. Gas 3" w.c.
Max. Relief Valve Pressure	30 psi
Max. Input.	225,000 Btu/Hr
Min. Input.	45,000 Btu/Hr
Max. Output @ 91.6% AFUE	206,100 Btu/Hr
Electrical Input	120 VAC 60 Hz
Max. Supply Current	< 10 Amperes

Clearance from Boiler Cabinet		
Surface	**Distance from Combustible Surfaces**	**Recommended Distance for Service**
Front	2"	24"
Rear	0"	0"
L. Side	0"	12"
R. Side	2"	18"
Top	10"	10"

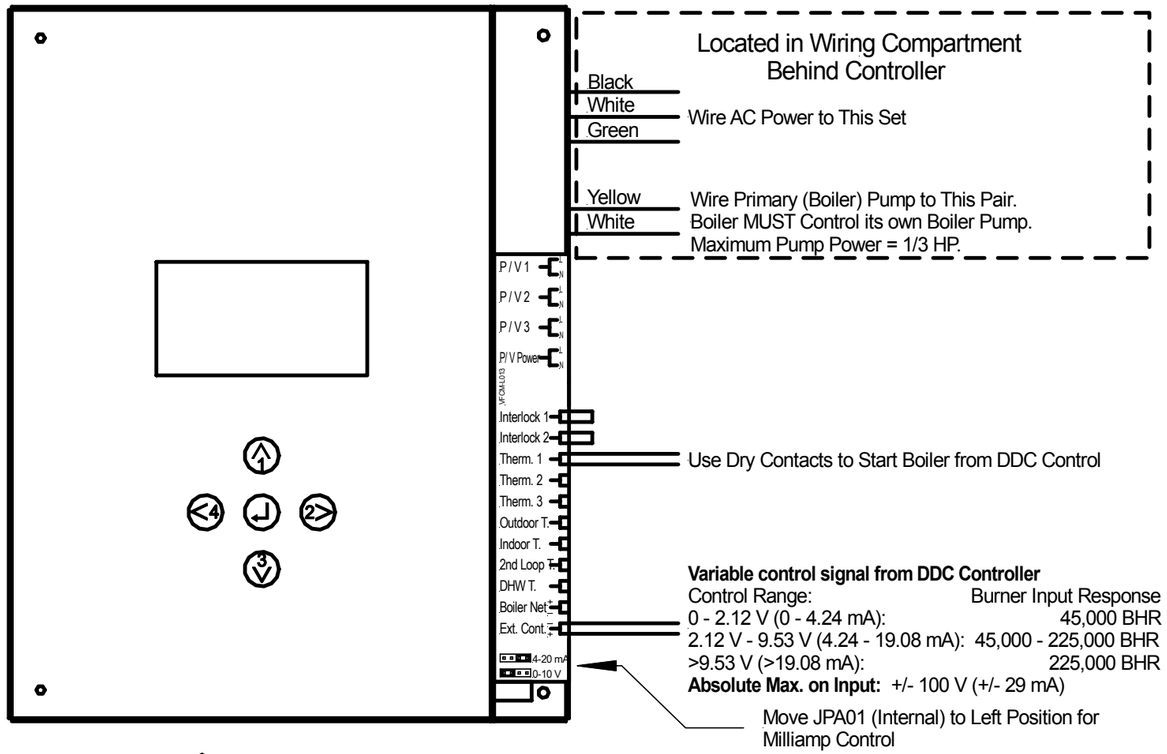

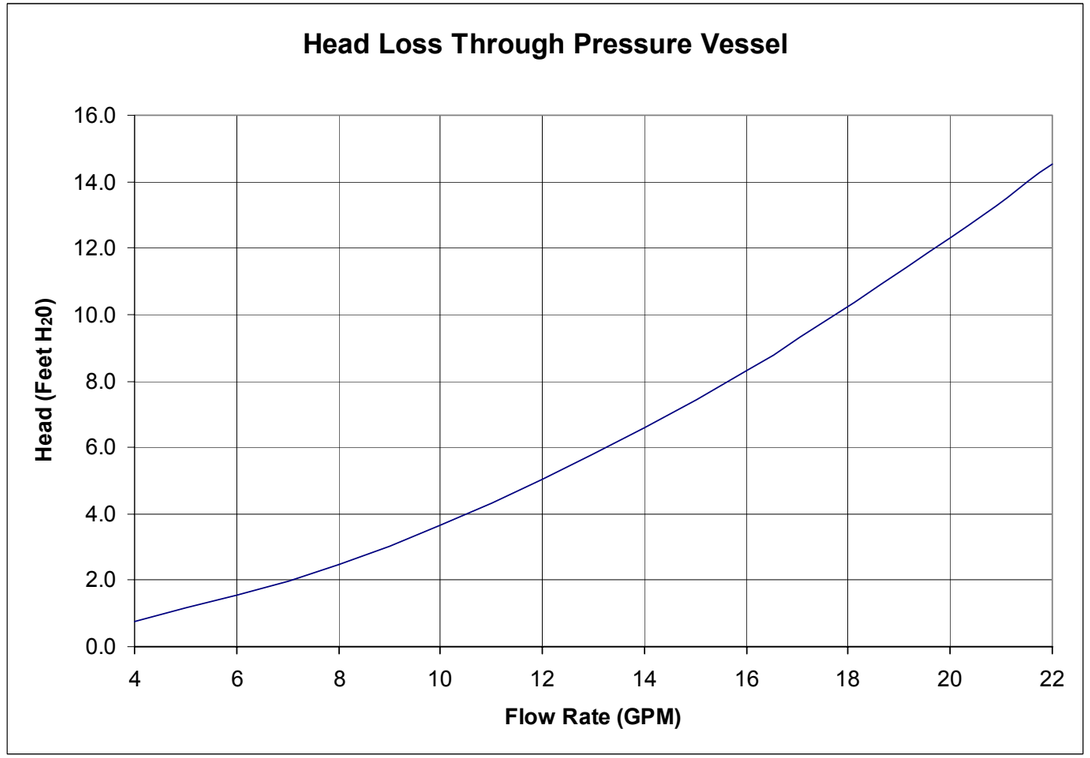

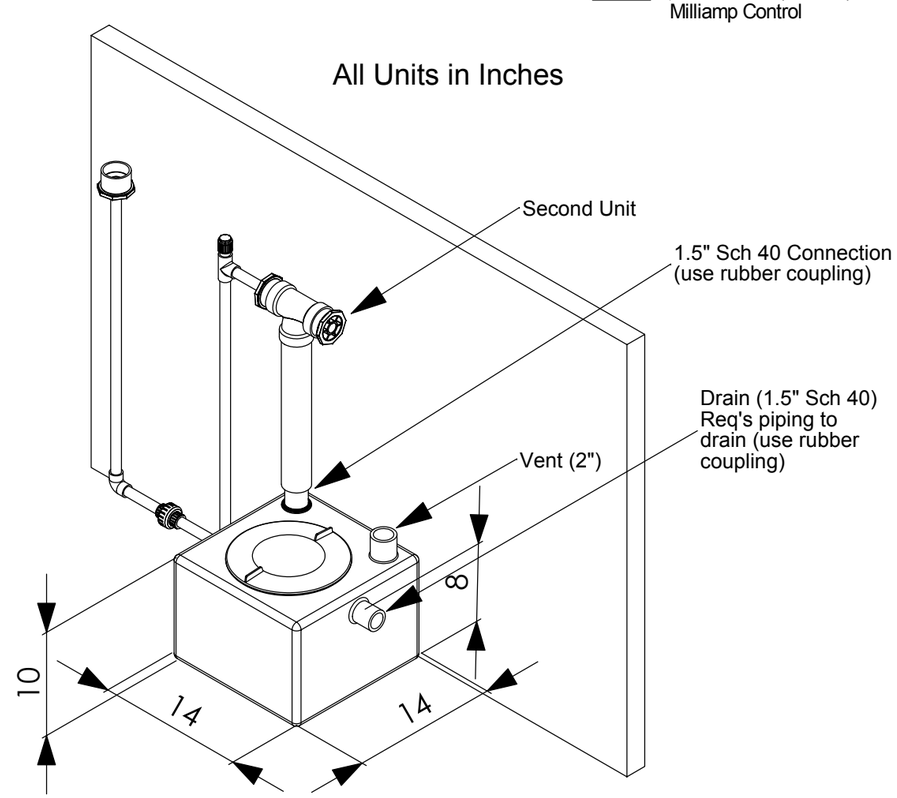

Using a short (<10' lineal) run of 1½" Primary piping, a Grundfos 26-64 or Taco 010 pump is generally accepted as appropriate for the VFC 45-225

Condensate neutralization:

If draining into ferrous or copper drainage, use IBC part# 67-Neut for acid neutralization.

Condensate output at maximum throttle:

- At 80°F return water temp. – approx. 7 litres / hr
- At 120°F return – approx. 3 litres / hr
- At 140°F return – trace amounts

IBC

VFC 45-225